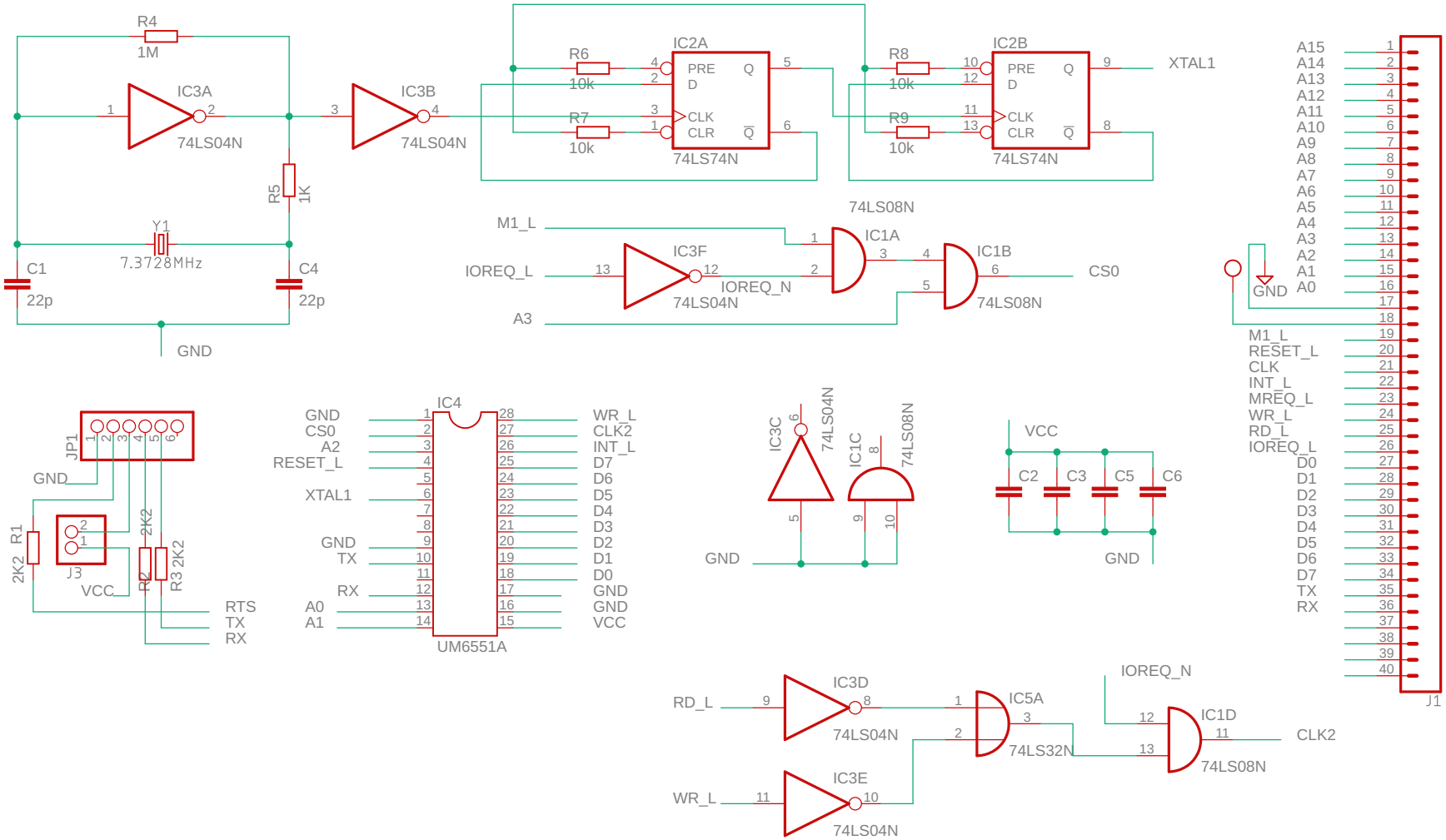
R4
1M
IC3A
74LS04N
R5
1K
Y1
7.3728MHz
C1
22p
C4
22p
GND
IC3B
74LS04N
R6
10k
R7
10k
IC2A
PRE
D
Q
CLK
CLR
Q̄
74LS74N
R8
10k
R9
10k
IC2B
XTAL1
M1_L
IOREQ_L
A3
IC3F
74LS04N
IOREQ_N
74LS08N
IC1A
IC1B
CS0
A15
A14
A13
A12
A11
A10
A9
A8
A7
A6
A5
A4
A3
A2
A1
A0
M1_L
RESET_L
CLK
INT_L
MREQ_L
WR_L
RD_L
IOREQ_L
D0
D1
D2
D3
D4
D5
D6
D7
TX
RX
J1
JP1
J3
R1
2K2
R2
2K2
R3
2K2
VCC
RTS
TX
RX
IC4
GND
CS0
A2
RESET_L
XTAL1
GND
TX
RX
A0
A1
WR_L
CLK2
INT_L
D7
D6
D5
D4
D3
D2
D1
D0
GND
GND
VCC
UM6551A
IC3C
74LS04N
IC1C
74LS08N
C2
C3
C5
C6
IC3D
74LS04N
IC3E
74LS04N
RD_L
WR_L
IC5A
74LS32N
IC1D
74LS08N
CLK2